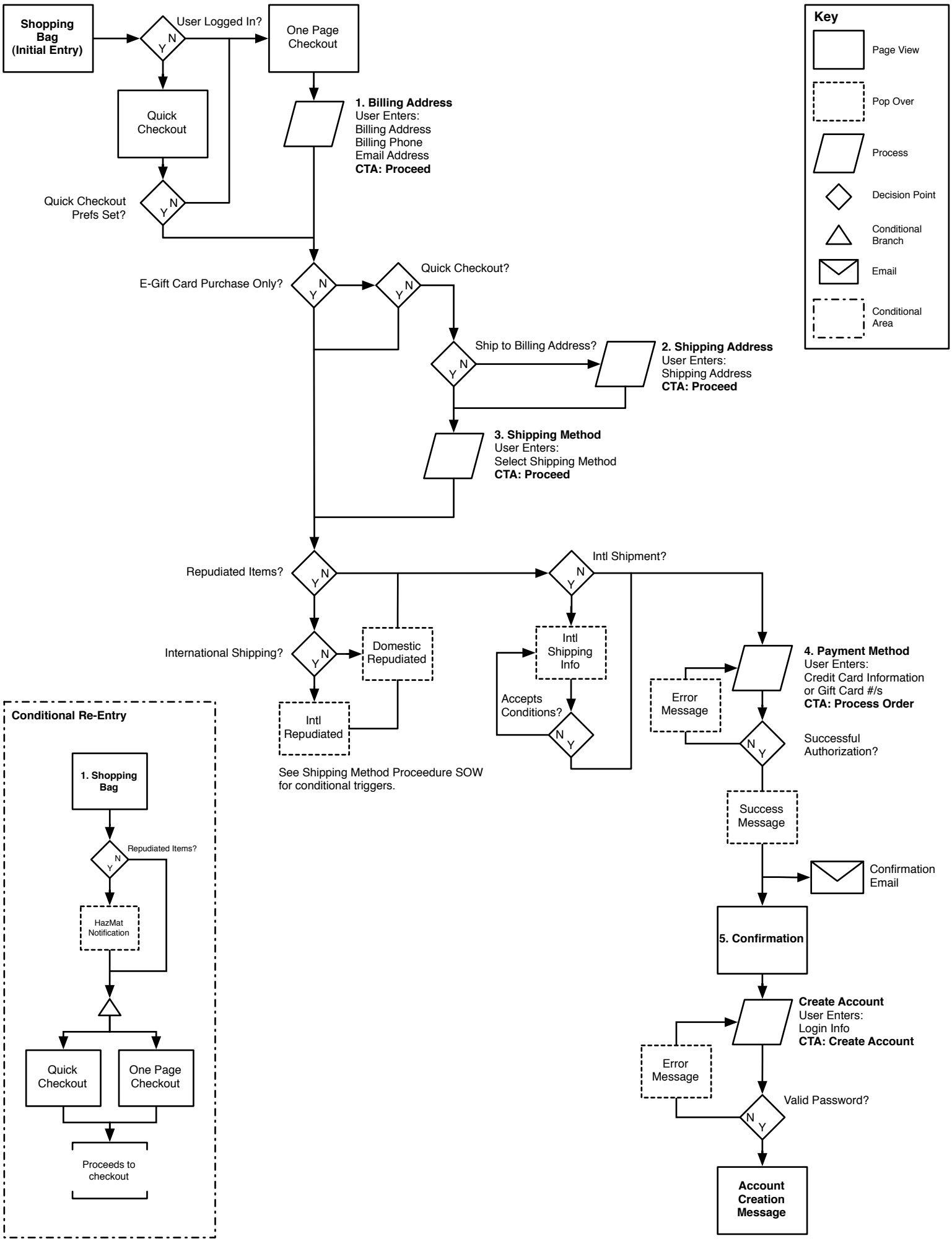
Key
Page View
Pop Over
Process
Decision Point
Conditional Branch
Email
Conditional Area
Shopping Bag (Initial Entry)
User Logged In?
N
Y
One Page Checkout
Quick Checkout
Quick Checkout Prefs Set?
1. Billing Address
User Enters:
Billing Address
Billing Phone
Email Address
CTA: Proceed
E-Gift Card Purchase Only?
Quick Checkout?
Ship to Billing Address?
2. Shipping Address
User Enters:
Shipping Address
CTA: Proceed
3. Shipping Method
User Enters:
Select Shipping Method
CTA: Proceed
Repudiated Items?
Intl Shipment?
International Shipping?
Domestic Repudiated
Intl Repudiated
Intl Shipping Info
Accepts Conditions?
See Shipping Method Proceedure SOW for conditional triggers.
4. Payment Method
User Enters:
Credit Card Information or Gift Card #/s
CTA: Process Order
Error Message
Successful Authorization?
Success Message
Confirmation Email
5. Confirmation
Create Account
User Enters:
Login Info
CTA: Create Account
Error Message
Valid Password?
Account Creation Message
Conditional Re-Entry
1. Shopping Bag
Repudiated Items?
HazMat Notification
Quick Checkout
One Page Checkout
Proceeds to checkout